This drawing is the property of VAT.

Customer number

Revision

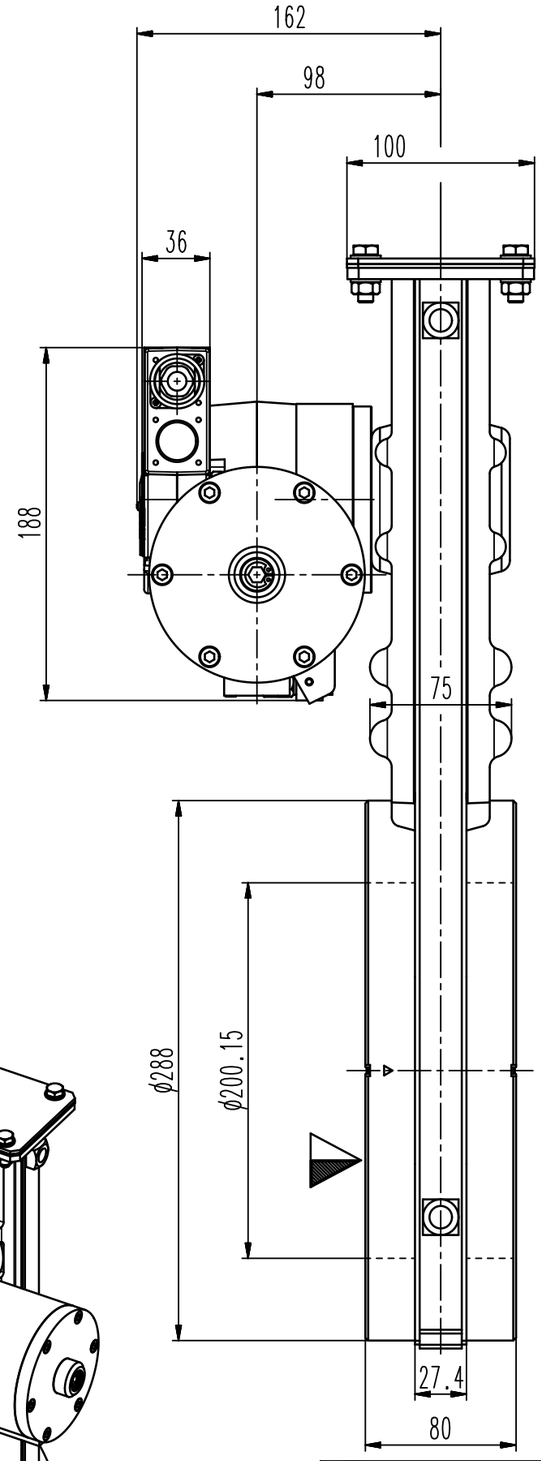

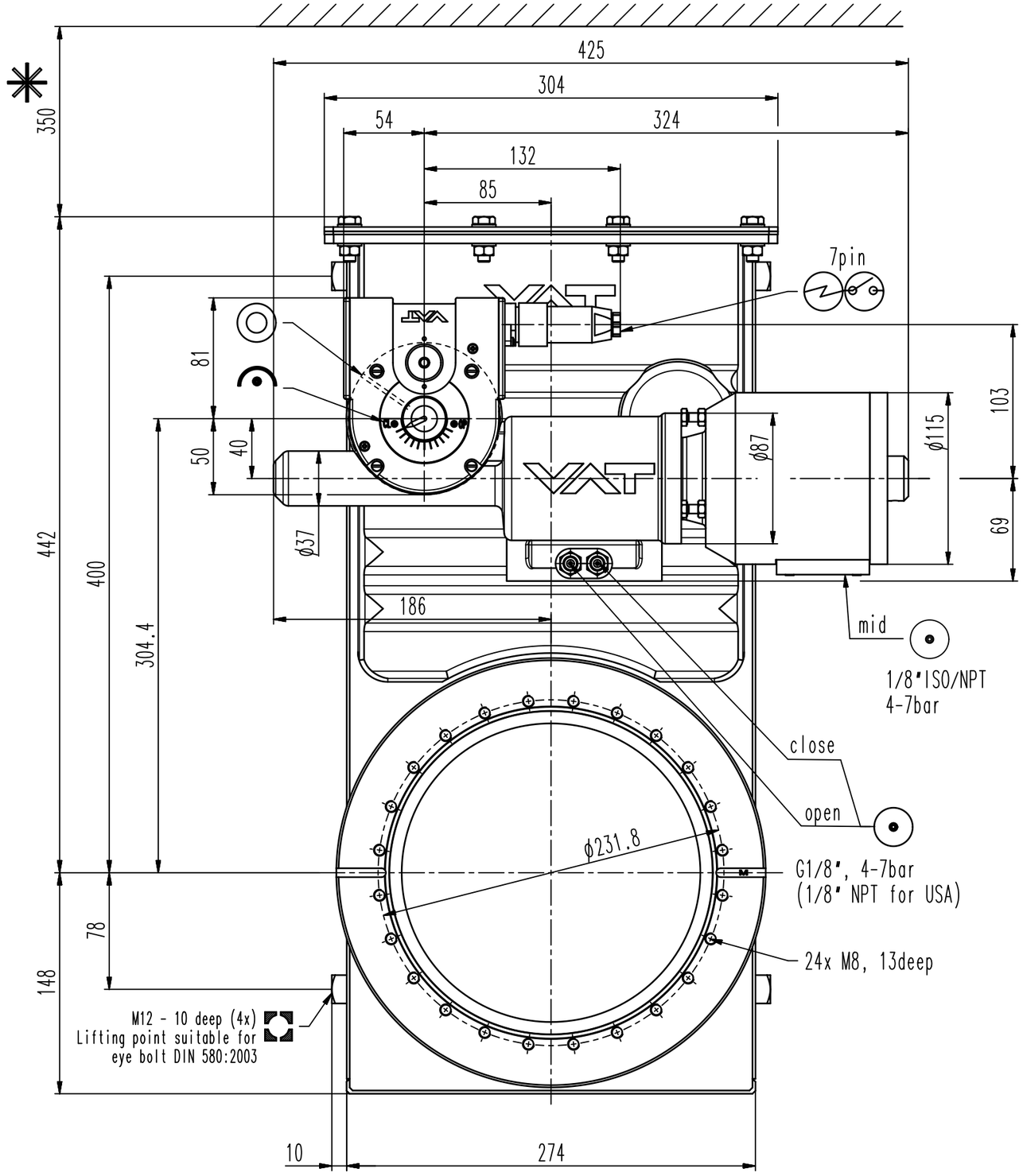

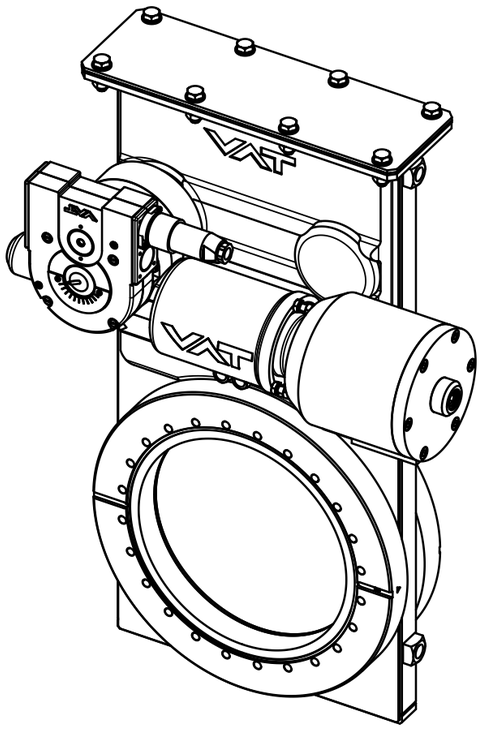

- Seat side
- Comp. air connection
- Electrical connection
- Leak detection port
- Mech. pos. indication
- Position indicator
- Required for dismantling
- Emergency actuation
- For attachment
- Bake-out area
- Differential pumping port

HV gate valve

Series	140
Ordering No.	14046-CE28-0001
Projection	E
DN	200
Flange	CF-F m
Dimensional Drawing	855278
Rev.	

VAT Vakuumventile AG
CH-9469 Haag , Switzerland
Tel ++41 81 7716161 Fax ++41 81 7714830

Rev.-Date: 09.08.16
Visa: WEF